REMOVAL

1. DISCHARGE REFRIGERANT FROM REFRIGERATION SYSTEM (See page AC-10)

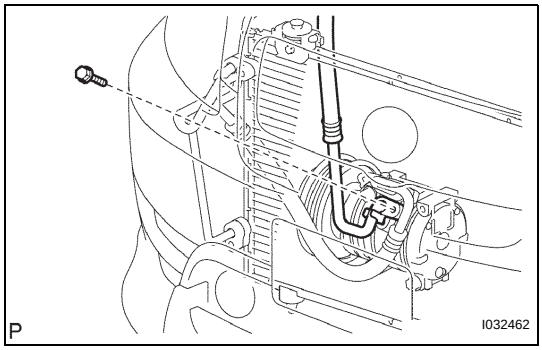

2. DISCONNECT SUCTION HOSE SUB-ASSEMBLY

(a) Remove the bolt and disconnect the cooler refrigerant suction hose No. 1 from the compressor and magnetic clutch.

(b) Remove the O-ring from the cooler refrigerant suction hose No. 1.

NOTICE:
Seal the opening of the disconnected parts using vinyl tape to prevent moisture and foreign matter from entering.

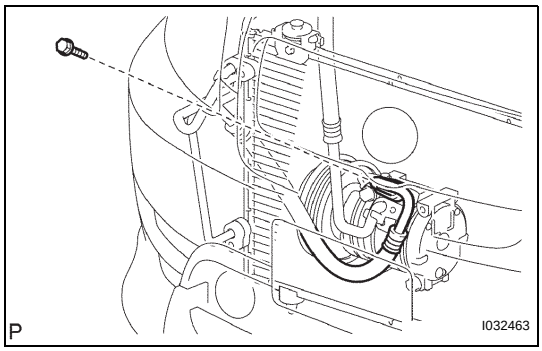

3. DISCONNECT DISCHARGE HOSE SUB-ASSEMBLY

(a) Remove the bolt and disconnect the discharge hose sub-assembly from the compressor and magnetic clutch.

(b) Remove the O-ring from the discharge hose sub-assembly.

NOTICE:
Seal the opening of the disconnected parts using vinyl tape to prevent moisture and foreign matter from entering.

4. REMOVE ENGINE UNDER COVER RH

5. REMOVE FAN AND GENERATOR V BELT (See page CH-6)

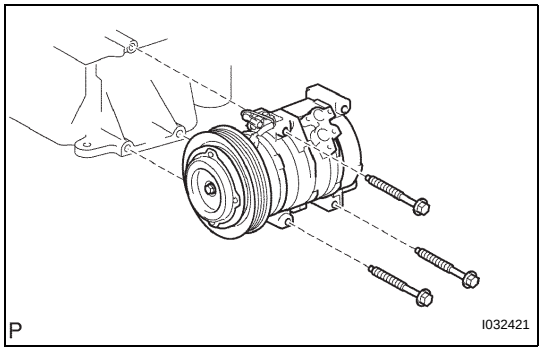

6. REMOVE COMPRESSOR AND MAGNETIC CLUTCH

(a) Disconnect the connector.

(b) Remove the 3 bolts and compressor and magnetic clutch.

cardiagn.com

DISASSEMBLY

1. REMOVE MAGNETIC CLUTCH ASSEMBLY

(a) Place the compressor and magnetic clutch in vise.

(b) Using vise pliers, hold the magnetic clutch hub.

(c) Remove the bolt, magnetic clutch hub and magnetic clutch washer.

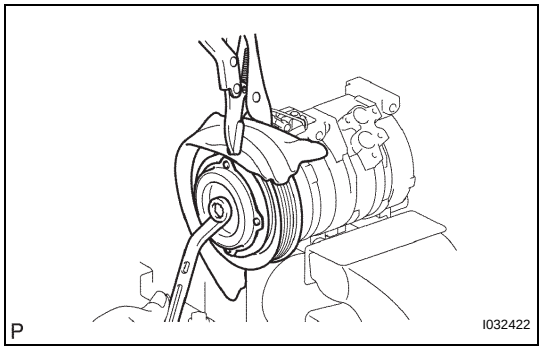

(d) Using a snap ring expander, remove the snap ring and magnetic clutch rotor.

(e) Remove the screw and disconnect the connector.

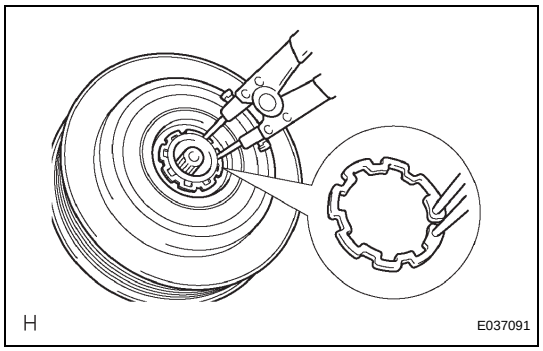

(f) Using a snap ring expander, remove the snap ring and magnetic clutch stator.

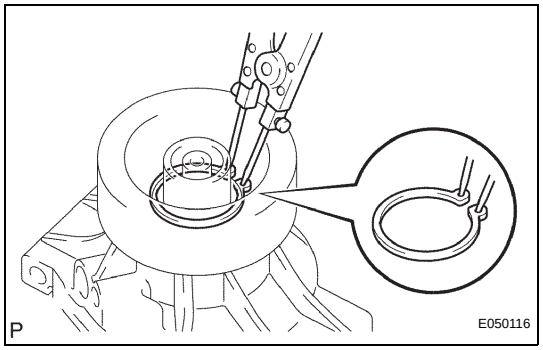

INSPECTION

1. INSPECT MAGNETIC CLUTCH CLEARANCE

(a) Set the dial indicator to the magnetic clutch hub.

(b) Connect the battery positive lead to the terminal 1 of the magnetic clutch connector and the negative lead to the earth wire. Turn on and off the magnetic clutch and measure the clearance.

Standard clearance:

0.35 - 0.60 mm (0.013 - 0.023 in.)

If the measured value is out of the standard range, remove the magnetic clutch hub and adjust it with magnetic clutch washers.

NOTICE:

Adjustment shall be performed with 3 or less magnetic clutch washers.

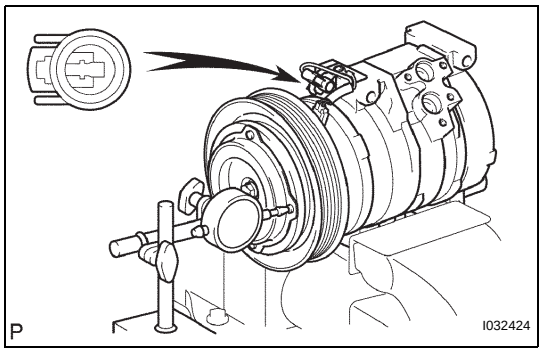

cardiagn.com

2. INSPECT COMPRESSOR OIL

(a) When replacing the compressor and magnetic clutch with a new one, after gradually removing the refrigerant gas from the service valve, drain the following amount of oil from the new compressor and magnetic clutch before installation.

Standard amount:

(Oil capacity inside new compressor and magnetic clutch: 120 + 15 cc (4.0 + 0.5 fl. oz.)) - (Remaining oil amount in the removed compressor and magnetic clutch) = (Oil amount to be removed when replacing)

NOTICE:

- **When checking the compressor oil level, observe the precautions on the cooler removal/installation.**
- **Because compressor oil remains in the pipes of the vehicle, if a new compressor and magnetic clutch is installed without removing some oil inside, the oil amount becomes too much, preventing heat exchange in the refrigerant cycle and causing refrigerant failure.**
- **If the remaining oil in the removed compressor and magnetic clutch is too small in volume, check for oil leakage.**
- **Be sure to use ND-OIL8 for compressor oil.**

REASSEMBLY

1. INSTALL MAGNETIC CLUTCH ASSEMBLY

(a) Matching the parts shown in the illustration, install the magnetic clutch stator.

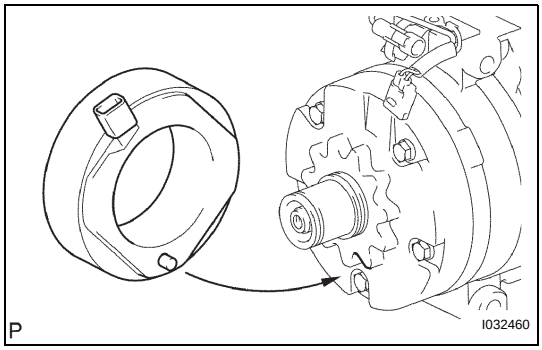

(b) Using a snap ring expander, install a new snap ring with the chamfered side facing up.

(c) Install the screw and connect the connector.

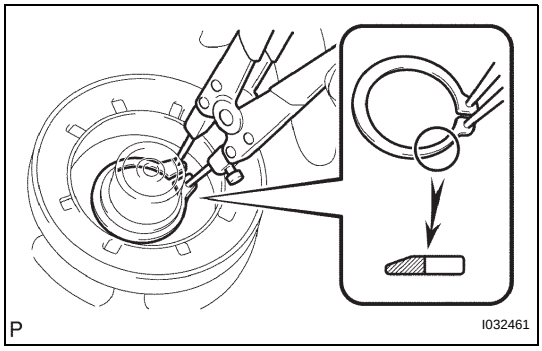

cardiagn.com

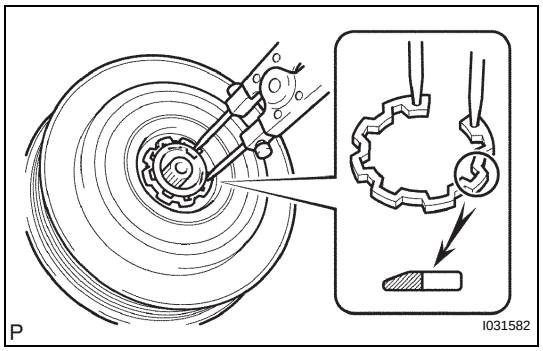

(d) Using a snap ring expander, install the magnetic clutch rotor and a new snap ring with the chamfered side facing up.

(e) Install the magnetic clutch washer and magnetic clutch hub.
NOTICE:
Do not change the combination of the magnetic clutch washers used before disassembly.

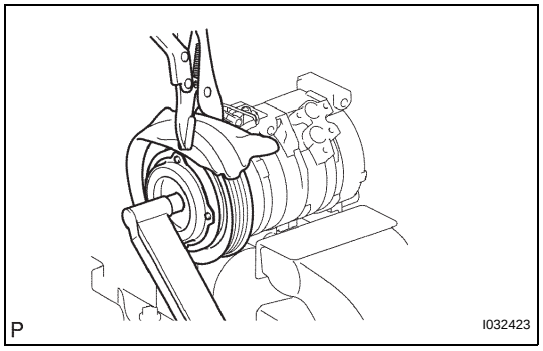

(f) Using vise pliers, hold the magnetic clutch hub and install the bolt.
Torque: 18 N*m (183 kgf*cm, 13 ft.*lbf)

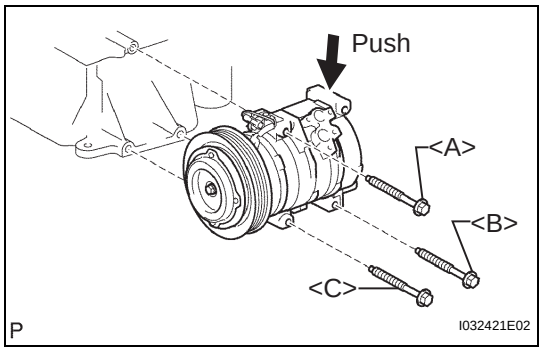

INSTALLATION

1. INSTALL COMPRESSOR AND MAGNETIC CLUTCH

(a) Install the compressor and magnetic clutch with the 3 bolts.

(b) Temporarily tighten bolt A.
HINT:
Do not over tighten the bolt until the compressor no longer moves.

(c) Push down on the rear side of the compressor and fully tighten bolt B, bolt C and bolt A in order.
Torque: 24.5 N*m (250 kgf*cm, 18 ft.*lbf)

(d) Connect the connector.

2. INSTALL DISCHARGE HOSE SUB-ASSEMBLY

(a) Remove the attached vinyl tape from the hose.

(b) Sufficiently apply compressor oil to the new O-ring and fit surface of the compressor and magnetic clutch.
Compressor oil:
ND-OIL8 or equivalent

(c) Install an O-ring to the discharge hose sub-assembly.

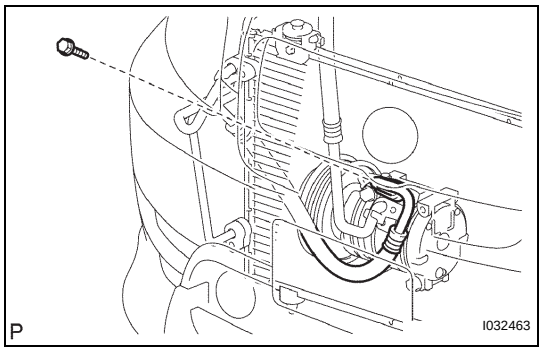

(d) Install the discharge hose sub-assembly to the compressor and magnetic clutch with the bolt.
Torque: 9.8 N*m (100 kgf*cm, 87 in.*lbf)

3. INSTALL SUCTION HOSE SUB-ASSEMBLY

(a) Remove the attached vinyl tape from the hose.

(b) Sufficiently apply compressor oil to the new O-ring and fit surface of the compressor and magnetic clutch.
Compressor oil:
ND-OIL8 or equivalent

cardiagn.com

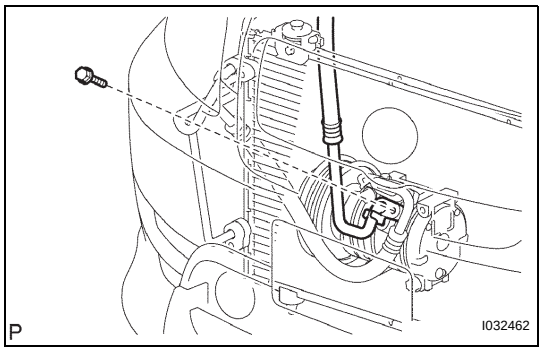

(c) Install an O-ring to the cooler refrigerant suction hose No. 1.

(d) Install the cooler refrigerant suction hose No. 1 to the compressor and magnetic clutch with the bolt.
Torque: 9.8 N*m (100 kgf*cm, 87 in.*lbf)

4. CHARGE REFRIGERANT (See page AC-11)

5. WARM UP ENGINE

6. INSPECT LEAKAGE OF REFRIGERANT (See page AC-11)

cardiagn.com